DRAWING NO.	FRAME NO.	SHEET NO.	REVISION
12H951532	1 OF 7	1	A

CONTROLLED COPY
B.NO START - 1 B.NO END - 52

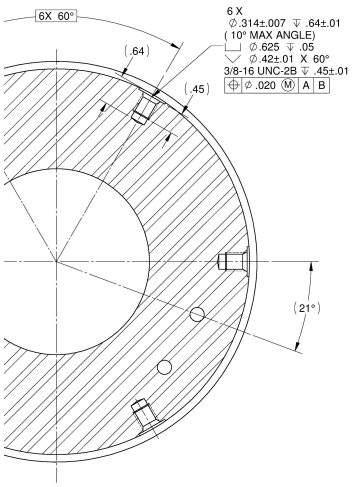

SECTION D-D

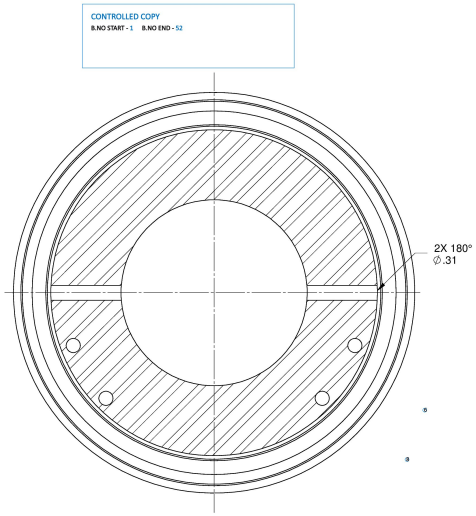

SECTION E-E

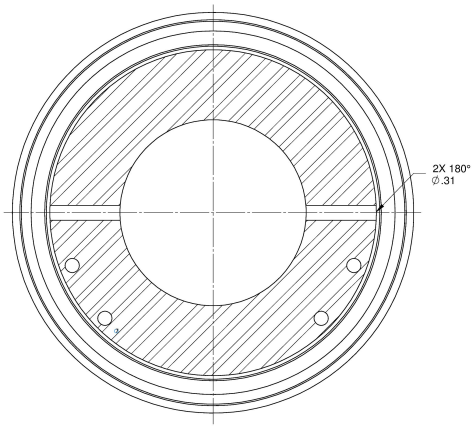

SECTION H-H

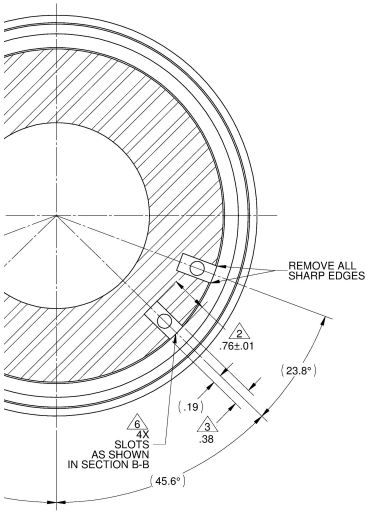

SECTION K-K

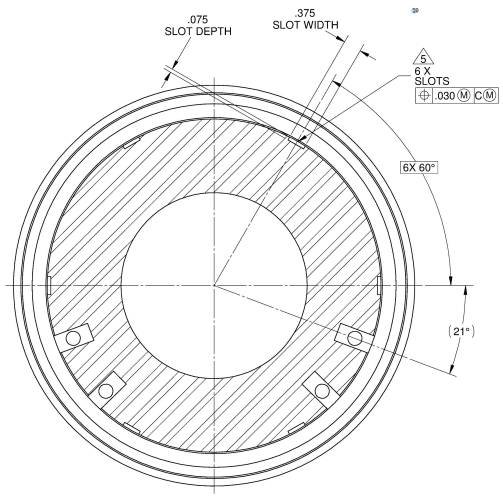

SECTION M-M

MANUFACTURING NOTES:

1. DRILL (∅.297) HOLES MINIMUM OF (51.40) INCHES. DO NOT EXCEED 53.40 INCHES IN LENGTH.
2. SLOT DEPTH IS OFF OF (∅7.003). 100% HOLE EXPOSURE REQUIRED. IF (∅.297) HOLE IS ONLY PARTIALLY EXPOSED, DEPTH ADJUSTMENT UP TO .05 CAN BE MADE WITHOUT CONTACTING ENGINEERING. ALL SHARP CORNERS MUST BE BLENDED. IF LARGER ADJUSTMENTS ARE NEEDED, OR HOLE IS NOT EXPOSED, CONTACT ENGINEERING.
3. 100% HOLE EXPOSURE REQUIRED. IF (∅.297) HOLE IS ONLY PARTIALLY EXPOSED, SLOT ANGLE ADJUSTMENTS CAN BE MADE WITHOUT CONTACTING ENGINEERING. ALL SHARP CORNERS MUST BE BLENDED. IF HOLE IS NOT EXPOSED CONTACT ENGINEERING.
4. DRIFT WITH STOCK Ø.257/.250 X 36.0 LG PRIOR TO CUTTING FMJ CONNECTIONS. MUST DRIFT MINIMUM OF 51.40 INCHES.
5. THIS SLOT TO BE CUT AFTER (.38) SAW SLOT.
6. BEFORE ENTIRE SLOT LENGTH IS CUT, FIRST MAKE PLUNGE CUT (106.10) INCHES FROM BOTTOM END OF MANDREL TO LOCATE (∅.297) HOLE. ADJUST MANDREL AS DESCRIBED IN NOTE #2 AND #3.
7. FMJ CONNECTION MUST PASS Ø.261±.001 X 6.0 LG DRIFT BAR AT MINIMUM OF 5.0 DEEP AFTER FMJ CONNECTION IS CUT. DO NOT DAMAGE FMJ THREADS OR SEALING SURFACES.
8. ADDITIONAL LENGTH ADDED TO THE THREAD BLANKING LENGTH TO ALLOW FOR 1 THREAD RE-CUT.

INSPECTION NOTES:

1. AFTER MACHINING, ID MUST PASS Ø3.833 X 42.0 LG DRIFT BAR.

UNLESS OTHERWISE SPECIFIED, CIRCULAR RUN-OUT ON ALL SURFACES OF REVOLUTION SHOWN ON COINCIDENT AXES (SAME CENTERLINE) MUST NOT EXCEED .015 IN. FULL INDICATOR MOVEMENT (FIM).

PRODUCTS AND TECHNOLOGY DEVELOPED IN U.S.A., OR BY CITIZENS OF THE U.S.A. ARE DEEMED TO BE OF U.S. ORIGIN AND THEREBY SUBJECT TO U.S. EXPORT CONTROL LAWS. THE EXPORT OR REEXPORT OF U.S. ORIGIN TECHNOLOGY BY ANY MEANS, INCLUDING DATA TRANSFER, IS PROHIBITED EXCEPT IN ACCORDANCE WITH U.S. LAW AND HALLIBURTON POLICY.

THIS DOCUMENT AND ITS CONTENTS ARE CONFIDENTIAL INFORMATION OF HALLIBURTON ENERGY SERVICES, INC. MAY ONLY BE PROVIDED TO AND USED BY PERSONS OUTSIDE HALLIBURTON PURSUANT TO THE TERMS OF A CONFIDENTIALITY AGREEMENT THAT EXPRESSLY COVERS THE TECHNOLOGY DISCLOSED IN THIS DOCUMENT. PERSONS IN POSSESSION OF THIS DOCUMENT, WHO DO NOT HAVE AN APPROPRIATE CONFIDENTIALITY AGREEMENT WITH HALLIBURTON, ARE DIRECTED TO IMMEDIATELY RETURN THIS DOCUMENT TO HALLIBURTON AND DESTROY ANY AND ALL COPIES.
© HALLIBURTON 2009

UNLESS OTHERWISE SPECIFIED

TOLERANCES
FABRICATION
X = ± .25
XX = ± .125
XXX = ± .060
ANGLES ± 3°
MACHINE
X = ± .030
XX = ± .015
XXX = ± .005
XXXX = ± .0010
ANGLES ± 1/2°

1. DO NOT SCALE DRAWING
2. DIMS. ARE IN INCHES
3. INTERPRET DIM TOL. PER ASME Y14.5M-1994
4. REMOVE ALL BURRS AND SHARP CORNERS
5. INSIDE CORNERS R .032, & OUTSIDE CORNERS R .020 OR CHAM. .020 X 45°
6. MACHINE FINISH 250 √

DESIGNED:		
S. DAVIS	07/09/19	
DRAWN: V. JAIN	07/10/19	
REFERENCE:	12H950439	
SUPERSEDES:		

THIRD ANGLE PROJECTION

HALLIBURTON HALLIBURTON ENERGY SERVICES HOUSTON TEXAS

TITLE
MANDREL
MFT PACKER
9 5/8 47-53.5, 9 7/8 66.6-68
4 1/2-12.60 VAMTOP
BOX X PIN

SIZE	DWG. NO.	REV
J	12H951532	A
SCALE: 1:1	WEIGHT: 991.49	SHEET 1 OF 1

Form Revision H
Roll Size: 34 X 217